CR, CRI, CRN

Vertical multi-stage centrifugal pumps

50 Hz

be
think
innovate

GRUNDFOS

CR 1

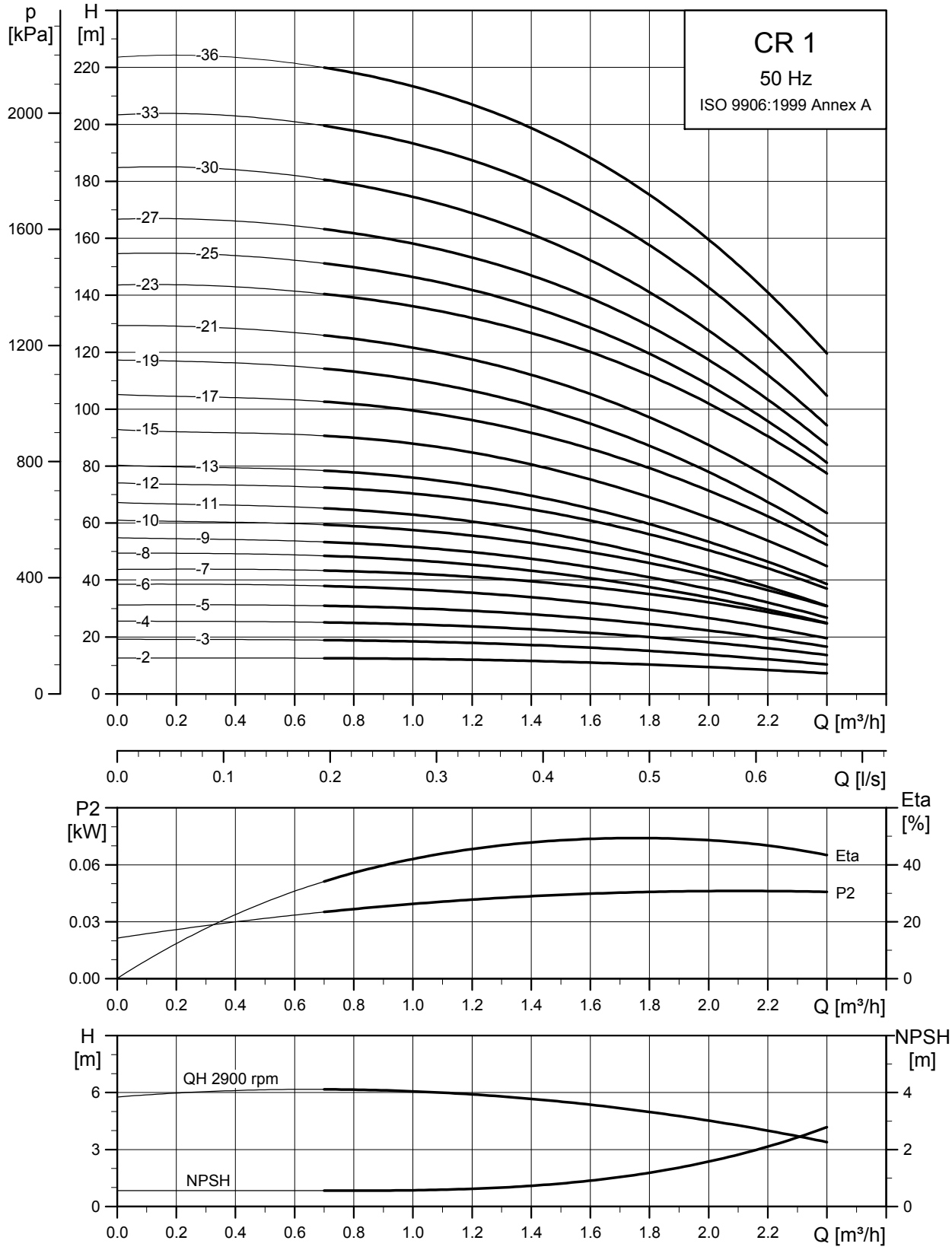
CR 1
50 Hz
ISO 9906:1999 Annex A
p [kPa]
H [m]
-36
-33
-30
-27
-25
-23
-21
-19
-17
-15
-13
-12
-11
-10
-9
-8
-7
-6
-5
-4
-3
-2
Q [m³/h]
Q [l/s]
P2 [kW]
Eta [%]
Eta
P2
H [m]
NPSH [m]
QH 2900 rpm
NPSH
TM02 7290 1013

Dimensional sketch

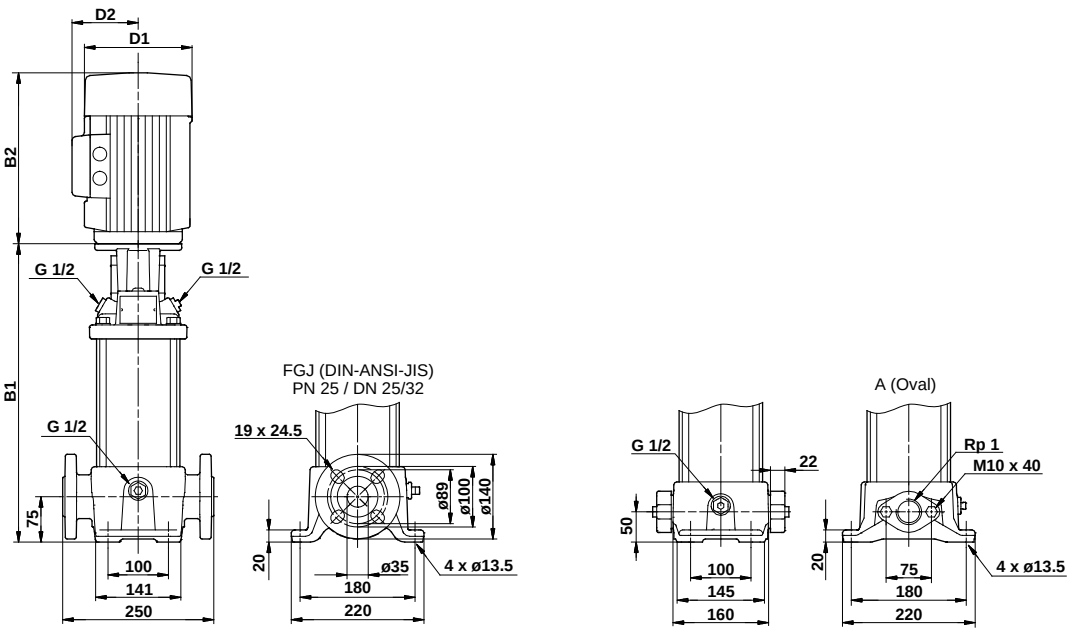

Dimensions and weights

Pump type	Motor P_2 [kW]	CR							
		Dimension [mm]						Net weight [kg]	
		Oval flange		DIN flange		D1	D2	Oval flange	DIN flange
		B1	B1+B2	B1	B1+B2				
CR 1-2	0.37	254	445	279	470	141	109	18	23
CR 1-3	0.37	254	445	279	470	141	109	18	23
CR 1-4	0.37	272	463	297	488	141	109	19	23
CR 1-5	0.37	290	481	315	506	141	109	19	24
CR 1-6	0.37	308	499	333	524	141	109	20	24
CR 1-7	0.37	326	517	351	542	141	109	20	25
CR 1-8	0.55	344	535	369	560	141	109	21	26
CR 1-9	0.55	362	553	387	578	141	109	21	26
CR 1-10	0.55	380	571	405	596	141	109	22	26
CR 1-11	0.55	398	589	423	614	141	109	22	27
CR 1-12	0.75	422	653	447	678	141	109	24	29
CR 1-13	0.75	440	671	465	696	141	109	25	29
CR 1-15	0.75	476	707	501	732	141	109	26	30
CR 1-17	1.10	512	763	537	788	141	109	29	33
CR 1-19	1.10	548	799	573	824	141	109	30	34
CR 1-21	1.10	584	835	609	860	141	109	30	35
CR 1-23	1.10	620	871	645	896	141	109	31	36
CR 1-25	1.50	-	-	697	978	178	110	-	44
CR 1-27	1.50	-	-	733	1014	178	110	-	44
CR 1-30	1.50	-	-	787	1068	178	110	-	46
CR 1-33	2.20	-	-	841	1162	178	110	-	47
CR 1-36	2.20	-	-	895	1216	178	110	-	49

CR 3

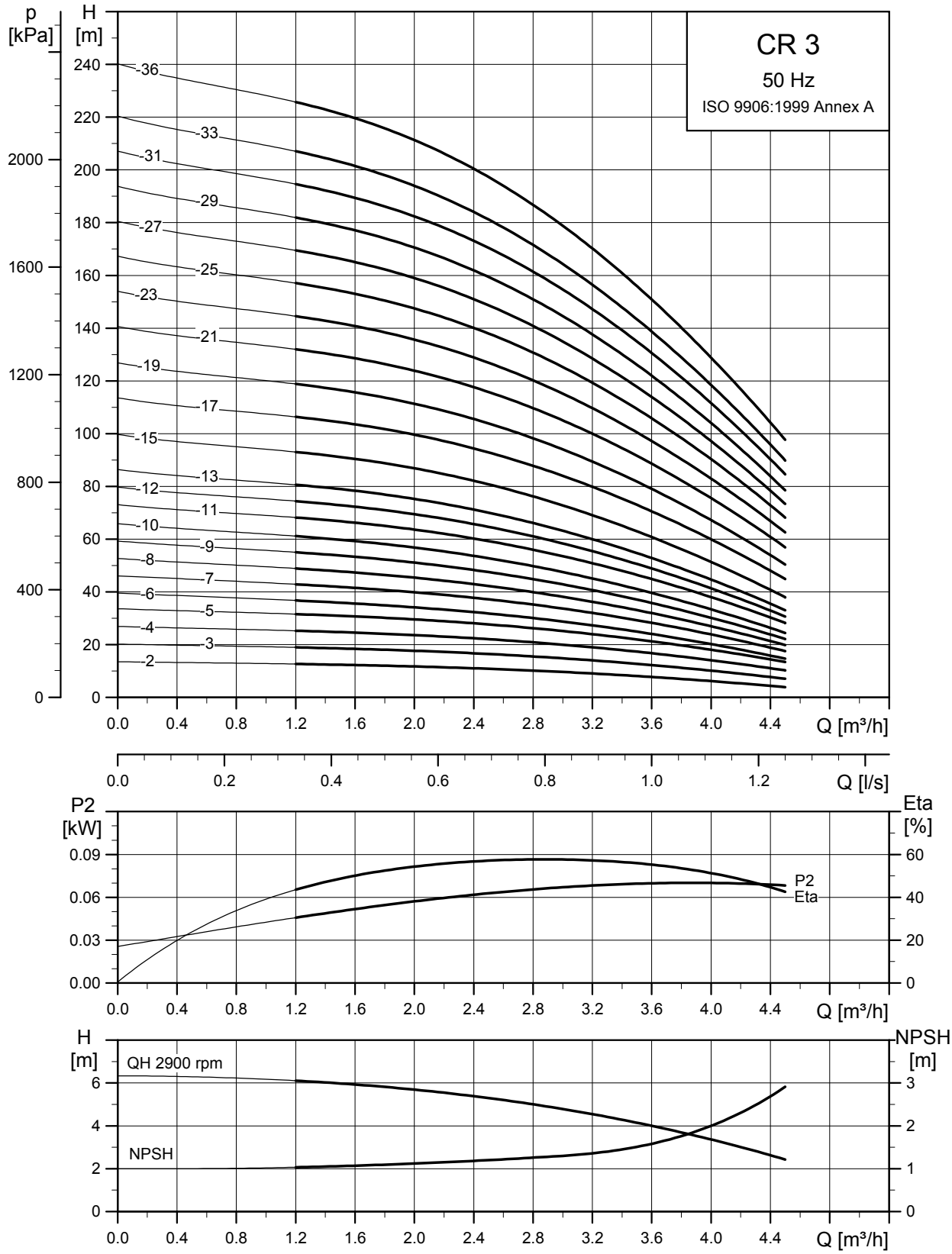
CR 3
50 Hz
ISO 9906:1999 Annex A
p [kPa]
H [m]
-36
-33
-31
-29
-27
-25
-23
-21
-19
-17
-15
-13
-12
-11
-10
-9
-8
-7
-6
-5
-4
-3
-2
Q [m³/h]
Q [l/s]
P2 [kW]
Eta [%]
P2
Eta
H [m]
NPSH [m]
QH 2900 rpm
NPSH
TM02 7292 1013

Dimensional sketch

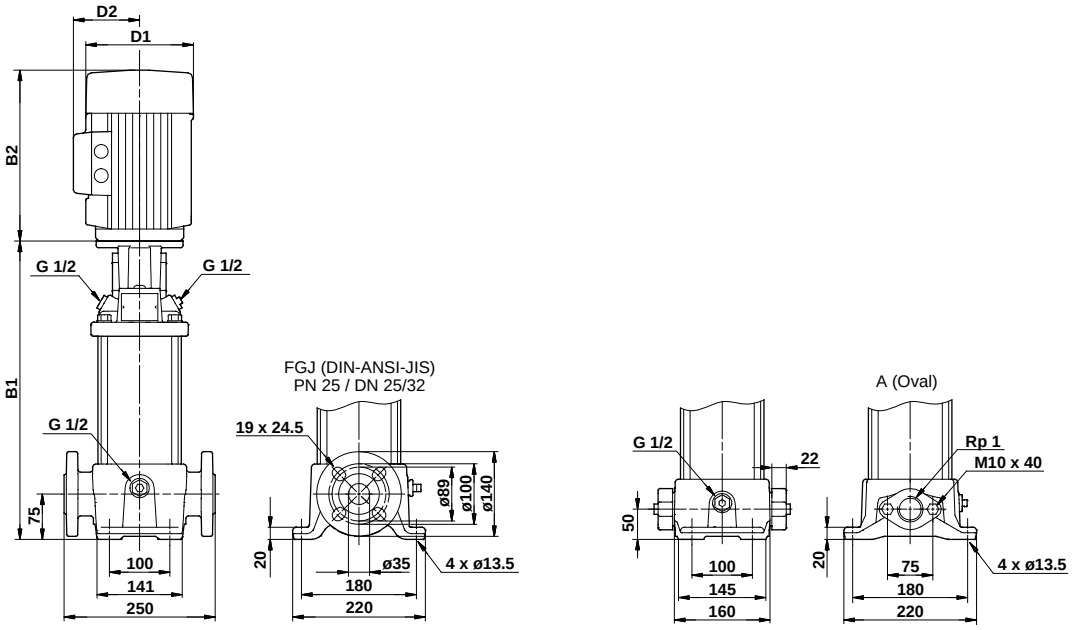

Dimensions and weights

Pump type	Motor P_2 [kW]	CR							
		Dimension [mm]						Net weight [kg]	
		Oval flange		DIN flange		D1	D2	Oval flange	DIN flange
		B1	B1+B2	B1	B1+B2				
CR 3-2	0.37	254	445	279	470	141	109	18	23
CR 3-3	0.37	254	445	279	470	141	109	18	23
CR 3-4	0.37	272	463	297	488	141	109	19	23
CR 3-5	0.37	290	481	315	506	141	109	19	24
CR 3-6	0.55	308	499	333	524	141	109	20	25
CR 3-7	0.55	326	517	351	542	141	109	21	25
CR 3-8	0.75	350	581	375	606	141	109	23	27
CR 3-9	0.75	368	599	393	624	141	109	23	28
CR 3-10	0.75	386	617	411	642	141	109	24	28
CR 3-11	1.1	404	655	429	680	141	109	26	31
CR 3-12	1.1	422	673	447	698	141	109	27	31
CR 3-13	1.1	440	691	465	716	141	109	27	32
CR 3-15	1.1	476	727	501	752	141	109	28	32
CR 3-17	1.5	528	809	553	834	178	110	36	40
CR 3-19	1.5	564	845	589	870	178	110	37	41
CR 3-21	2.2	600	921	625	946	178	110	38	42
CR 3-23	2.2	636	957	661	982	178	110	39	43
CR 3-25	2.2	-	-	697	1018	178	110	-	44
CR 3-27	2.2	-	-	733	1054	178	110	-	45
CR 3-29	2.2	-	-	769	1090	178	110	-	46
CR 3-31	3	-	-	809	1144	198	120	-	53
CR 3-33	3	-	-	845	1180	198	120	-	53
CR 3-36	3	-	-	899	1234	198	120	-	55

CR 5

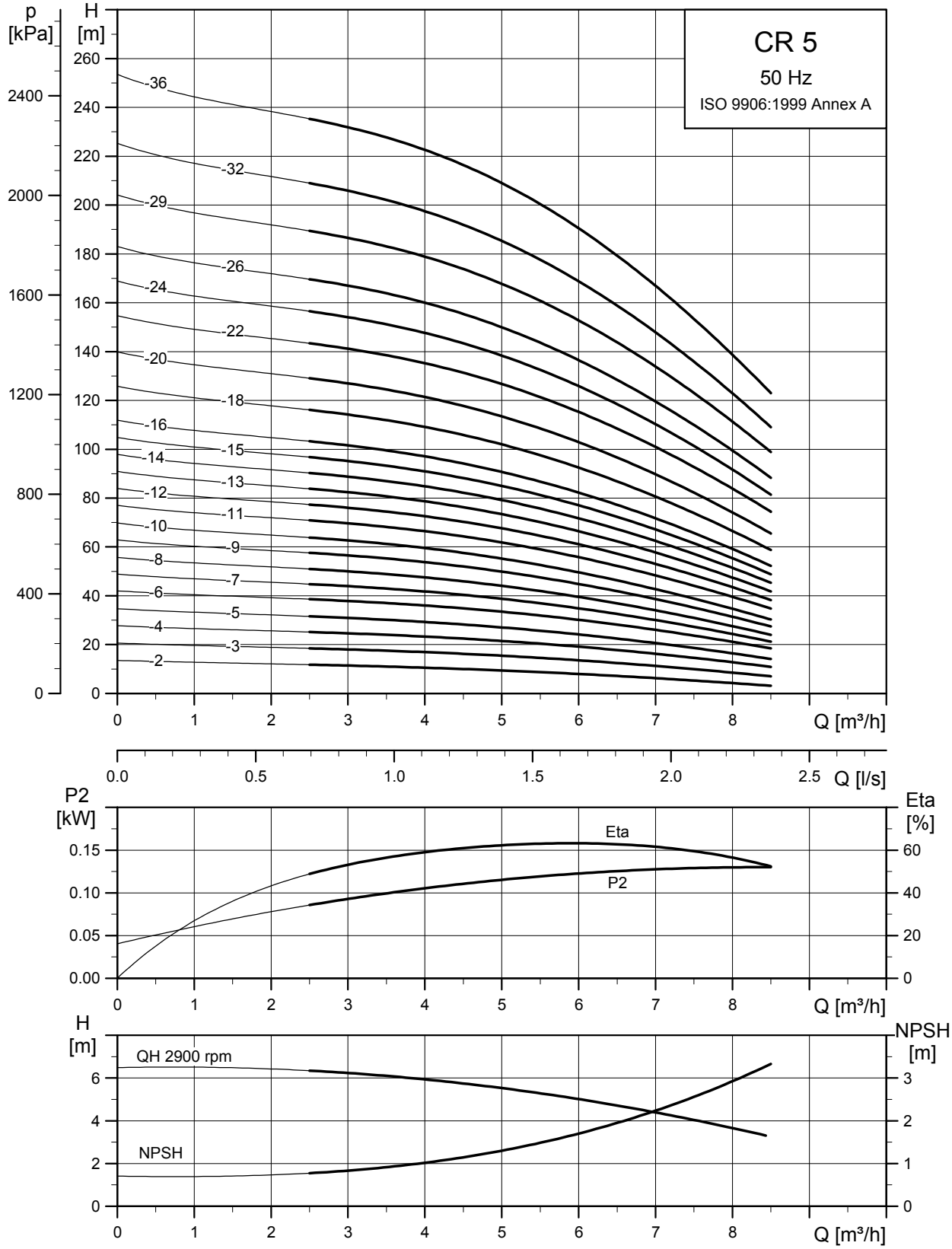
CR 5
50 Hz
ISO 9906:1999 Annex A
p [kPa]
H [m]
-36
-32
-29
-26
-24
-22
-20
-18
-16
-15
-14
-13
-12
-11
-10
-9
-8
-7
-6
-5
-4
-3
-2
Q [m³/h]
Q [l/s]
P2 [kW]
Eta [%]
Eta
P2
H [m]
NPSH [m]
QH 2900 rpm
NPSH
TM02 7294 1013

Dimensional sketch

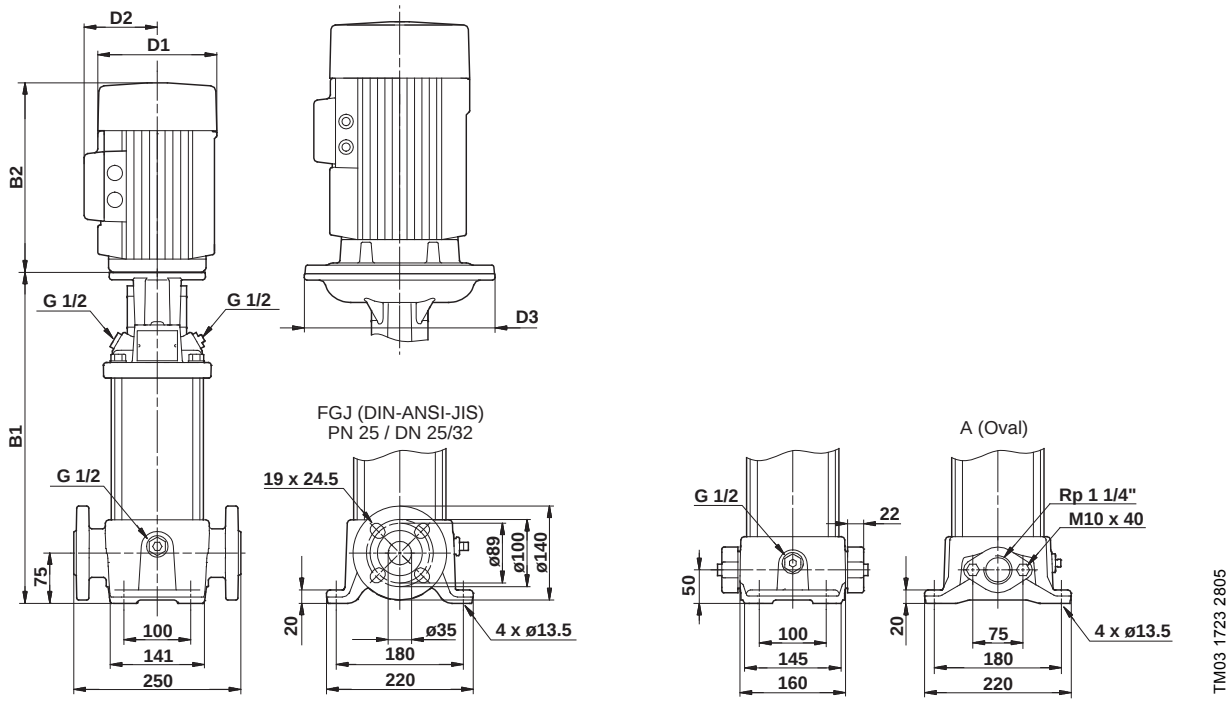

Dimensions and weights

Pump type	Motor P_2 [kW]	CR								
		Dimension [mm]							Net weight [kg]	
		Oval flange		DIN flange		D1	D2	D3	Oval flange	DIN flange
		B1	B1+B2	B1	B1+B2					
CR 5-2	0.37	254	445	279	470	141	109	-	18	23
CR 5-3	0.55	281	472	306	497	141	109	-	20	24
CR 5-4	0.55	308	499	333	524	141	109	-	20	25
CR 5-5	0.75	341	572	366	597	141	109	-	22	27
CR 5-6	1.10	368	619	393	644	141	109	-	25	30
CR 5-7	1.10	395	646	420	671	141	109	-	26	30
CR 5-8	1.10	422	673	447	698	141	109	-	26	31
CR 5-9	1.50	465	746	490	771	178	110	-	34	38
CR 5-10	1.50	492	773	517	798	178	110	-	34	39
CR 5-11	2.20	519	840	544	865	178	110	-	36	40
CR 5-12	2.20	546	867	571	892	178	110	-	36	41
CR 5-13	2.20	573	894	598	919	178	110	-	37	41
CR 5-14	2.20	600	921	625	946	178	110	-	37	42
CR 5-15	2.20	627	948	652	973	178	110	-	38	43
CR 5-16	2.20	654	975	679	1000	178	110	-	38	43
CR 5-18	3.00	712	1047	737	1072	198	120	-	46	50
CR 5-20	3.00	766	1101	791	1126	198	120	-	47	52
CR 5-22	4.00	820	1192	845	1217	220	134	-	57	62
CR 5-24	4.00	-	-	899	1271	220	134	-	-	63
CR 5-26	4.00	-	-	953	1325	220	134	-	-	64
CR 5-29	4.00	-	-	1034	1406	220	134	-	-	66
CR 5-32	5.50	-	-	1145	1536	220	134	300	-	82
CR 5-36	5.50	-	-	1253	1644	220	134	300	-	84

CR 10

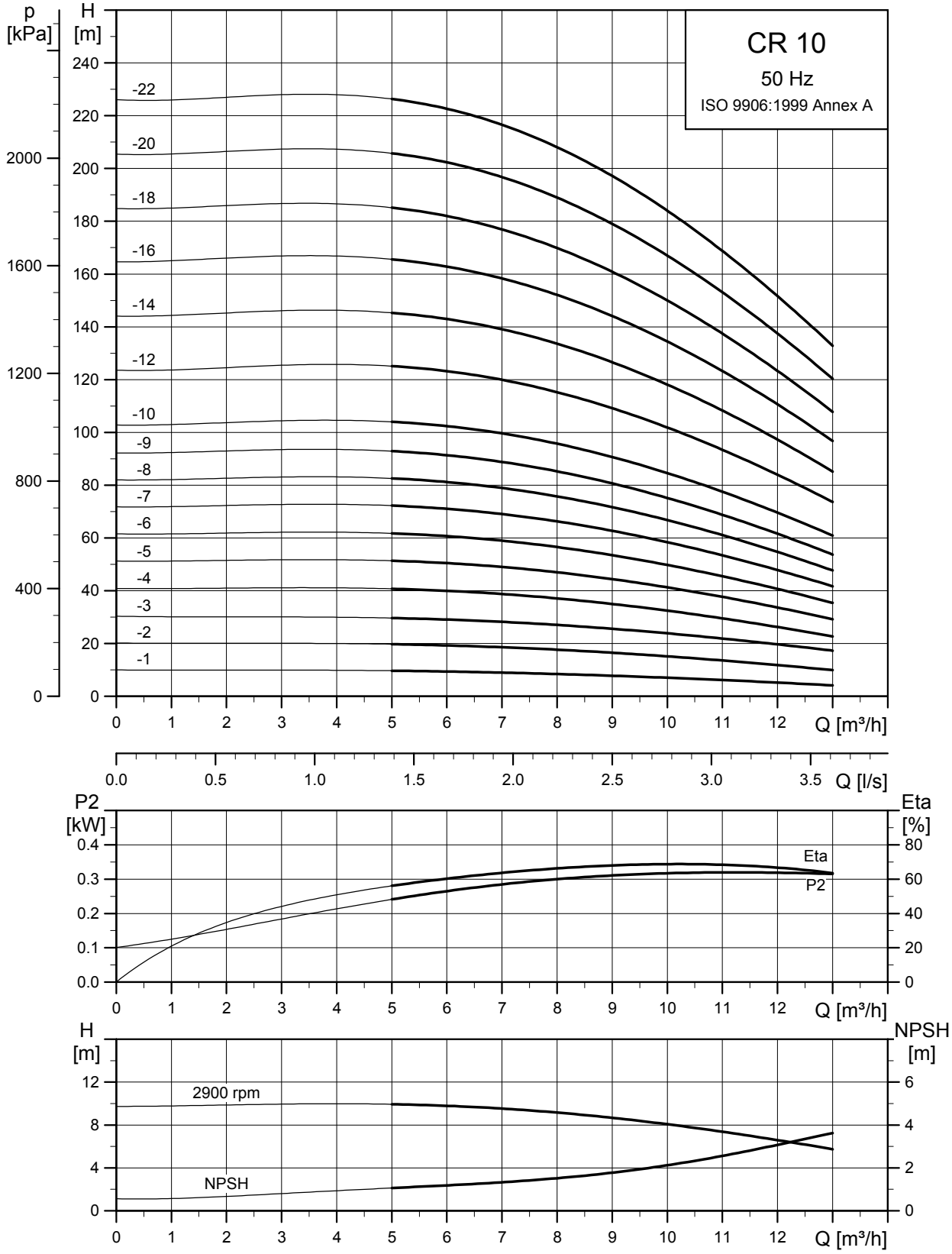
CR 10
50 Hz
ISO 9906:1999 Annex A
p [kPa]
H [m]
-22
-20
-18
-16
-14
-12
-10
-9
-8
-7
-6
-5
-4
-3
-2
-1
Q [m³/h]
Q [l/s]
P2 [kW]
Eta [%]
Eta
P2
H [m]
NPSH [m]
2900 rpm
NPSH
TM02 7296 1013

Dimensional sketch

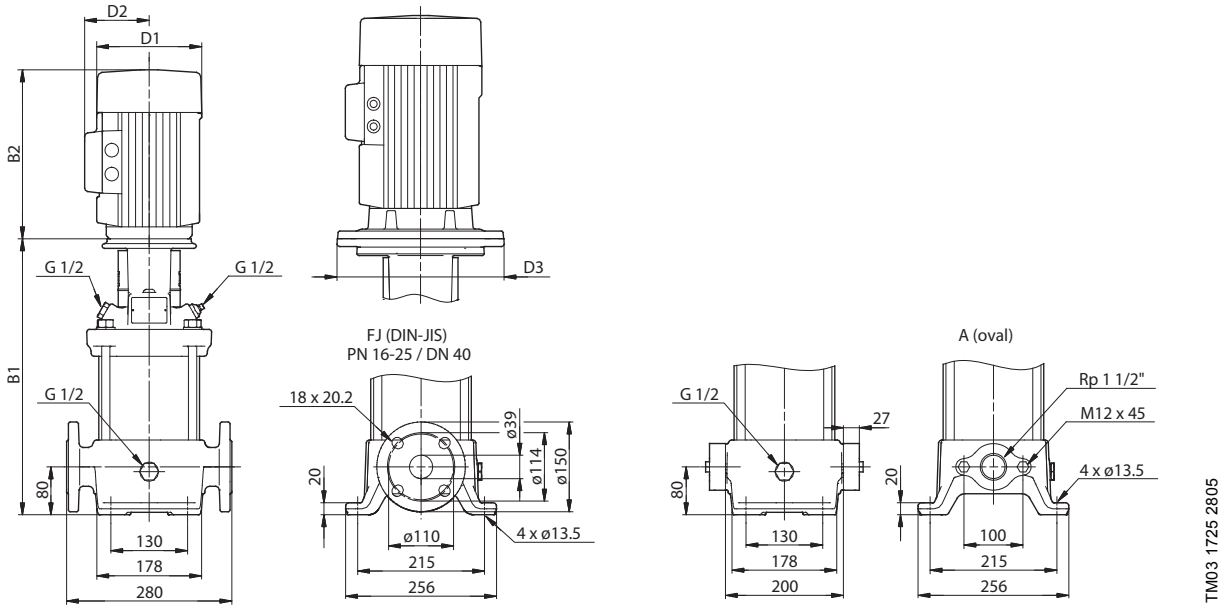

Dimensions and weights

Pump type	Motor P_2 [kW]	CR								
		Dimension [mm]							Net weight [kg]	
		Oval flange		DIN flange		D1	D2	D3	Oval flange	DIN flange
		B1	B1+B2	B1	B1+B2					
CR 10-1	0.37	343	534	343	534	141	109	-	31	34
CR 10-2	0.75	347	578	347	578	141	109	-	34	36
CR 10-3	1.10	377	628	377	628	141	109	-	37	39
CR 10-4	1.50	423	704	423	704	178	110	-	45	47
CR 10-5	2.20	453	774	453	774	178	110	-	46	49
CR 10-6	2.20	483	804	483	804	178	110	-	47	50
CR 10-7	3.00	518	853	518	853	198	120	-	54	57
CR 10-8	3.00	548	883	548	883	198	120	-	55	58
CR 10-9	3.00	578	913	578	913	198	120	-	56	59
CR 10-10	4.00	608	980	608	980	220	134	-	66	69
CR 10-12	4.00	668	1040	668	1040	220	134	-	69	71
CR 10-14	5.50	760	1151	760	1151	220	134	300	91	94
CR 10-16	5.50	820	1211	820	1211	220	134	300	93	96
CR 10-18	7.50	-	-	880	1259	260	159	300	-	109
CR 10-20	7.50	-	-	940	1319	260	159	300	-	112
CR 10-22	7.50	-	-	1000	1379	260	159	300	-	114

CR 15

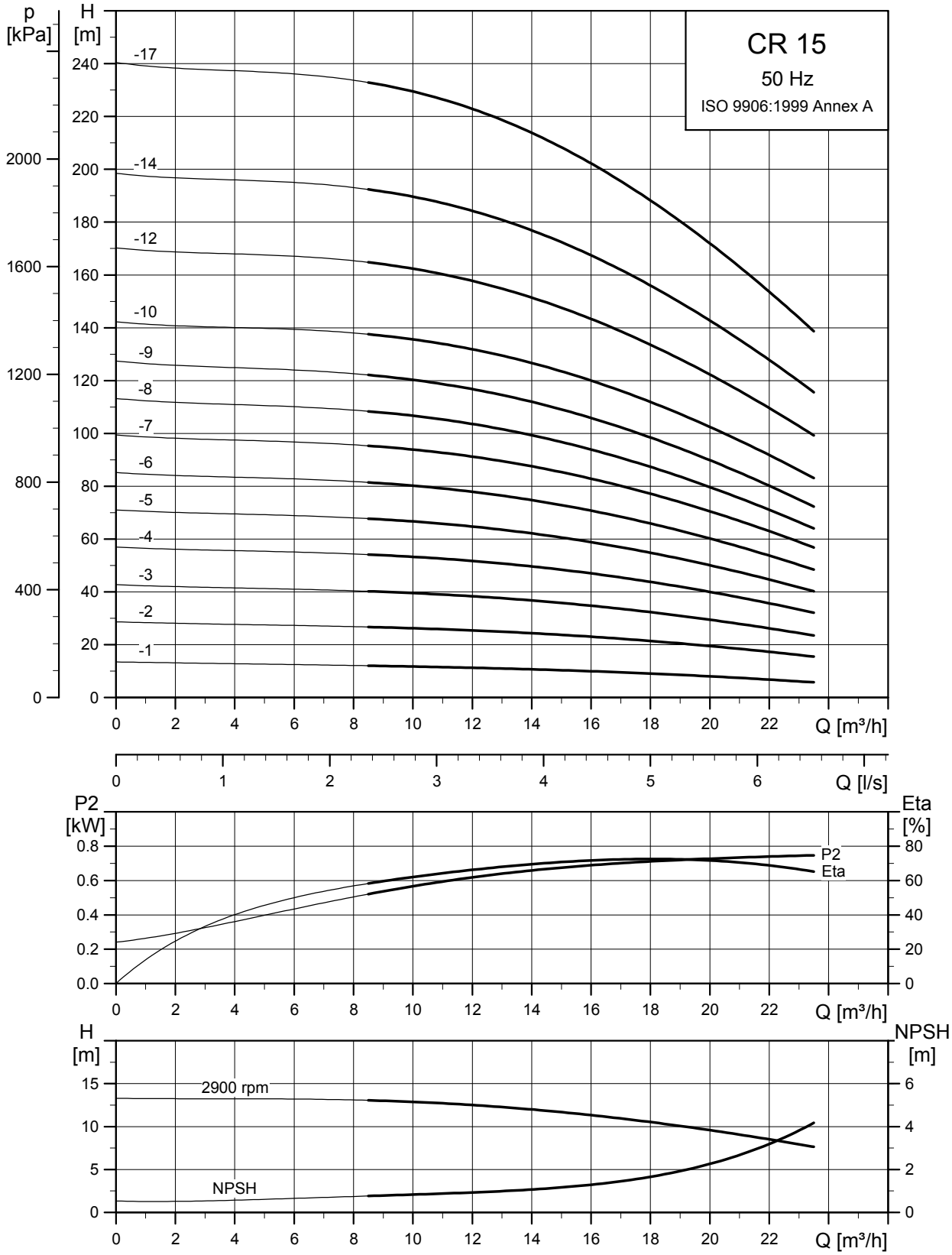
CR 15
50 Hz
ISO 9906:1999 Annex A
p [kPa]
H [m]
-17
-14
-12
-10
-9
-8
-7
-6
-5
-4
-3
-2
-1
Q [m³/h]
Q [l/s]
P2 [kW]
Eta [%]
P2
Eta
H [m]
NPSH [m]
2900 rpm
NPSH
TM02 7298 1013

Dimensional sketch

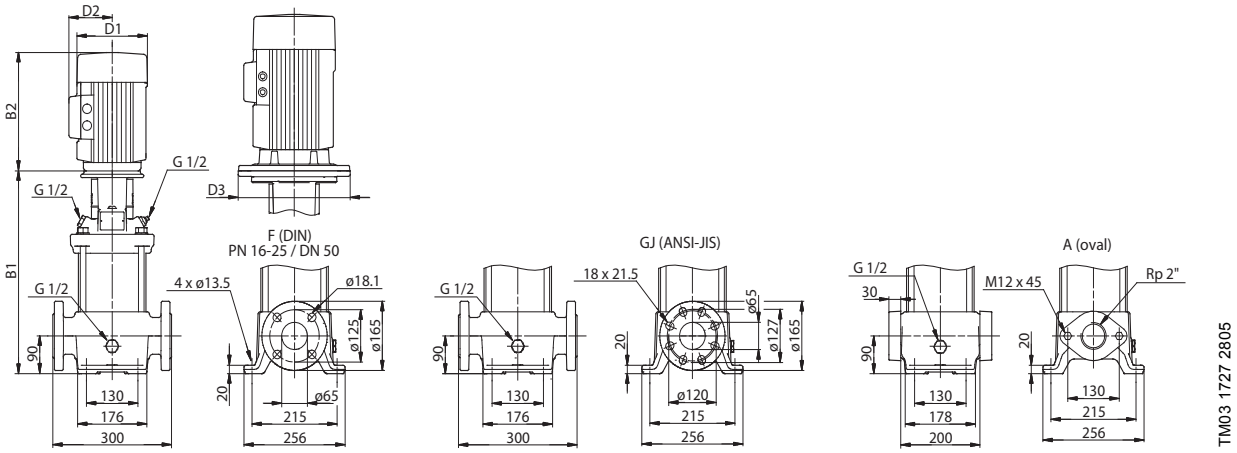

Dimensions and weights

Pump type	Motor P_2 [kW]	CR								
		Dimension [mm]							Net weight [kg]	
		Oval flange		DIN flange		D1	D2	D3	Oval flange	DIN flange
		B1	B1+B2	B1	B1+B2					
CR 15-1	1.10	400	651	400	651	141	109	-	41	42
CR 15-2	2.20	415	736	415	736	178	110	-	49	50
CR 15-3	3.00	465	800	465	800	198	120	-	56	57
CR 15-4	4.00	510	882	510	882	220	134	-	67	68
CR 15-5	4.00	555	927	555	927	220	134	-	68	69
CR 15-6	5.50	632	1023	632	1023	220	134	300	90	91
CR 15-7	5.50	677	1068	677	1068	220	134	300	92	93
CR 15-8	7.50	-	-	722	1101	260	159	300	-	105
CR 15-9	7.50	-	-	767	1146	260	159	300	-	107
CR 15-10	11.00	-	-	889	1360	314	204	350	-	149
CR 15-12	11.00	-	-	979	1450	314	204	350	-	153
CR 15-14	11.00	-	-	1069	1540	314	204	350	-	157
CR 15-17	15.00	-	-	1204	1675	314	204	350	-	175

CR 20

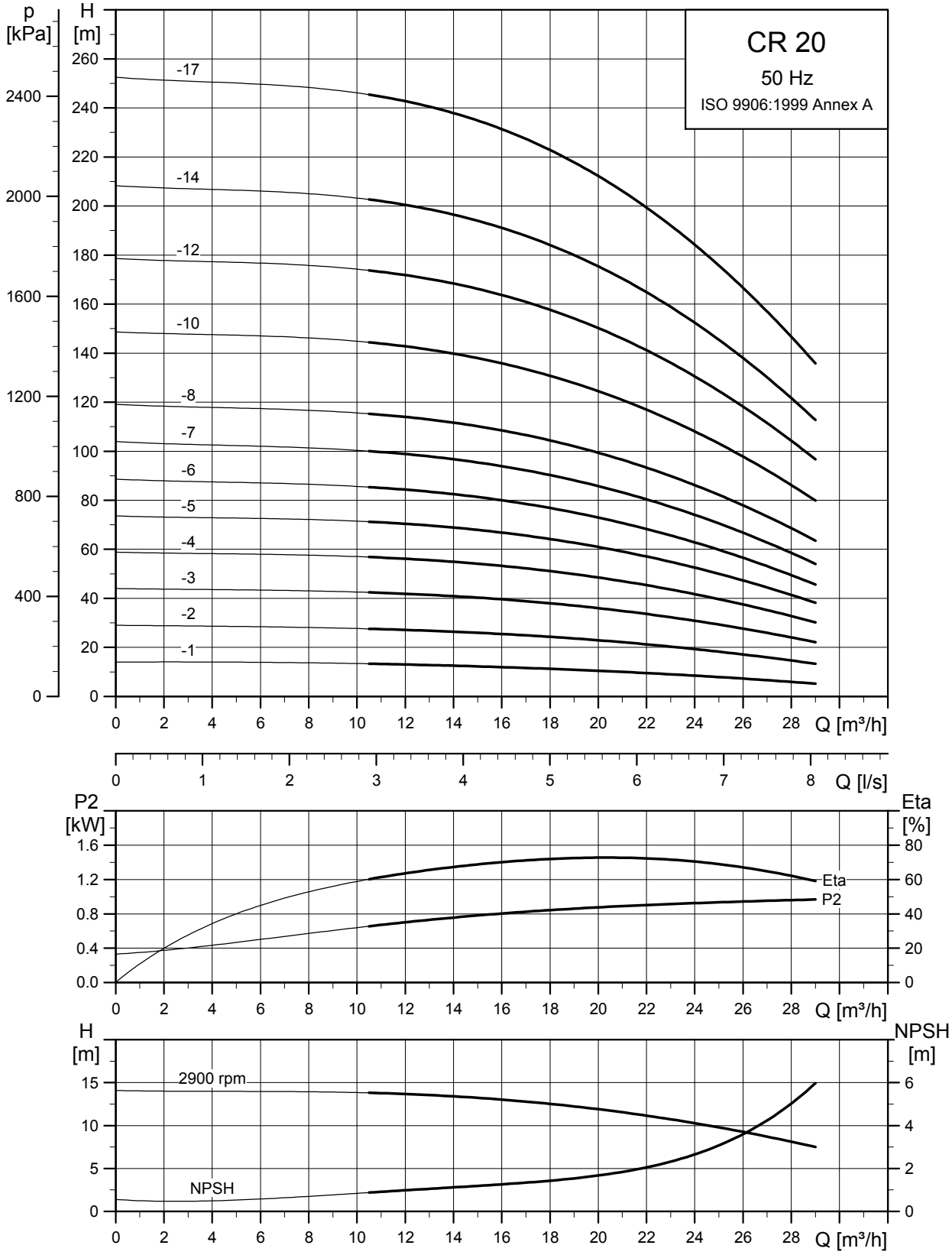
CR 20
50 Hz
ISO 9906:1999 Annex A
p [kPa]
H [m]
-17
-14
-12
-10
-8
-7
-6
-5
-4
-3
-2
-1
Q [m³/h]
Q [l/s]
P2 [kW]
Eta [%]
Eta
P2
H [m]
NPSH [m]
2900 rpm
NPSH
TM02 7300 1013

Dimensional sketch

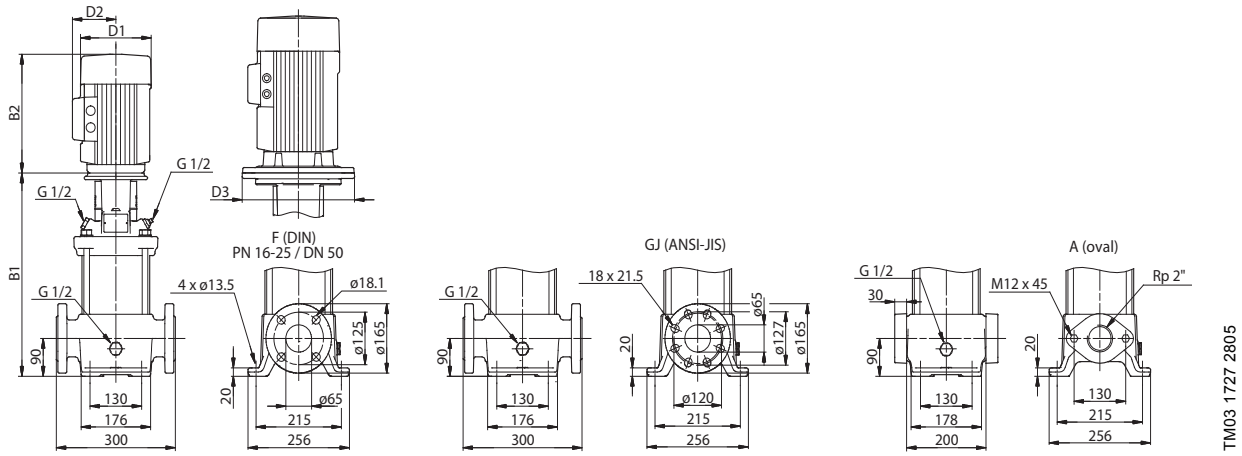

Dimensions and weights

Pump type	Motor P_2 [kW]	CR								
		Dimension [mm]							Net weight [kg]	
		Oval flange		DIN flange		D1	D2	D3	Oval flange	DIN flange
		B1	B1+B2	B1	B1+B2					
CR 20-1	1.10	400	651	400	651	141	109	-	41	42
CR 20-2	2.20	415	736	415	736	178	110	-	49	50
CR 20-3	4.00	465	837	465	837	220	134	-	65	66
CR 20-4	5.50	542	933	542	933	220	134	300	87	88
CR 20-5	5.50	587	978	587	978	220	134	300	89	90
CR 20-6	7.50	632	1011	632	1011	260	159	300	101	102
CR 20-7	7.50	677	1056	677	1056	260	159	300	103	103
CR 20-8	11.00	-	-	799	1270	314	204	350	-	146
CR 20-10	11.00	-	-	889	1360	314	204	350	-	149
CR 20-12	15.00	-	-	979	1450	314	204	350	-	166
CR 20-14	15.00	-	-	1069	1540	314	204	350	-	170
CR 20-17	18.50	-	-	1204	1719	314	204	350	-	188

CR 32

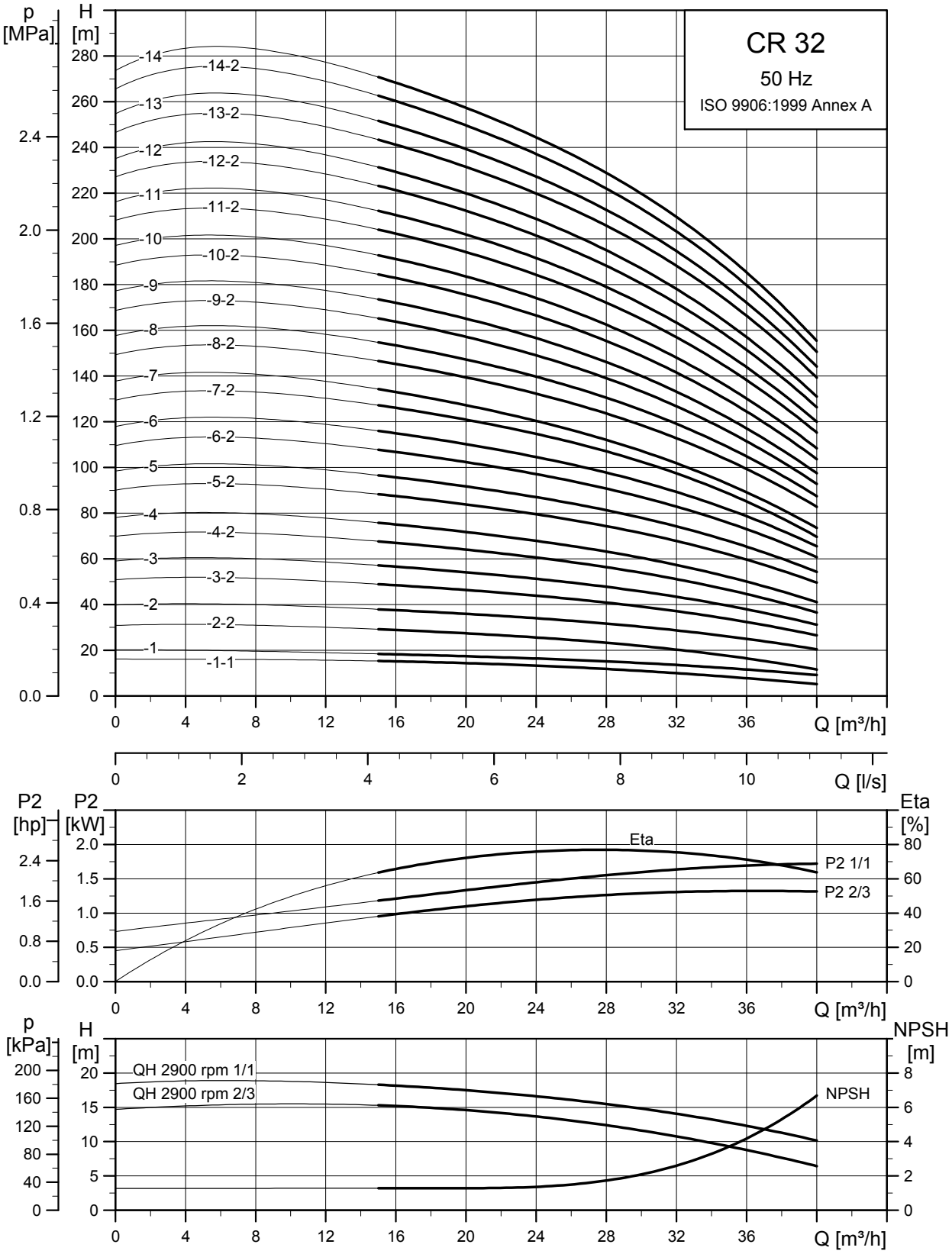
CR 32
50 Hz
ISO 9906:1999 Annex A
p [MPa]
H [m]
-14
-14-2
-13
-13-2
-12
-12-2
-11
-11-2
-10
-10-2
-9
-9-2
-8
-8-2
-7
-7-2
-6
-6-2
-5
-5-2
-4
-4-2
-3
-3-2
-2
-2-2
-1
-1-1
Q [m³/h]
Q [l/s]
P2 [hp]
P2 [kW]
Eta [%]
Eta
P2 1/1
P2 2/3
p [kPa]
H [m]
NPSH [m]
QH 2900 rpm 1/1
QH 2900 rpm 2/3
NPSH
TM02 7302 1013

Dimensional sketch

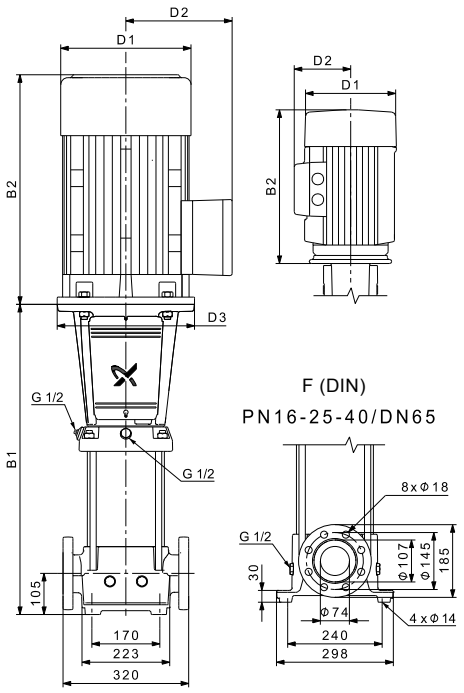

TM01 1749 3298

Dimensions and weights

Pump type	Motor P_2 [kW]	CR					
		Dimension [mm]					Net weight [kg]
		B1	B1+B2	D1	D2	D3	
CR 32-1-1	1.50	505	786	178	110	-	64
CR 32-1	2.20	505	826	178	110	-	64
CR 32-2-2	3.00	575	910	198	120	-	73
CR 32-2	4.00	575	947	220	134	-	82
CR 32-3-2	5.50	645	1036	220	134	300	96
CR 32-3	5.50	645	1036	220	134	300	96
CR 32-4-2	7.50	715	1094	260	159	300	110
CR 32-4	7.50	715	1094	260	159	300	111
CR 32-5-2	11.00	895	1366	314	204	350	158
CR 32-5	11.00	895	1366	314	204	350	158
CR 32-6-2	11.00	965	1436	314	204	350	161
CR 32-6	11.00	965	1436	314	204	350	161
CR 32-7-2	15.00	1035	1506	314	204	350	177
CR 32-7	15.00	1035	1506	314	204	350	177
CR 32-8-2	15.00	1105	1576	314	204	350	183
CR 32-8	15.00	1105	1576	314	204	350	183
CR 32-9-2	18.50	1175	1690	314	204	350	200
CR 32-9	18.50	1175	1690	314	204	350	200
CR 32-10-2	18.50	1245	1760	314	204	350	203
CR 32-10	18.50	1245	1760	314	204	350	203
CR 32-11-2	22.00	1315	1856	314	204	350	220
CR 32-11	22.00	1315	1856	314	204	350	220
CR 32-12-2	22.00	1385	1926	314	204	350	224
CR 32-12	22.00	1385	1926	314	204	350	224
CR 32-13-2	30.00	1455	2066	396	315	400	344
CR 32-13	30.00	1455	2066	396	315	400	344
CR 32-14-2	30.00	1525	2136	396	315	400	347
CR 32-14	30.00	1525	2136	396	315	400	347

CR 45

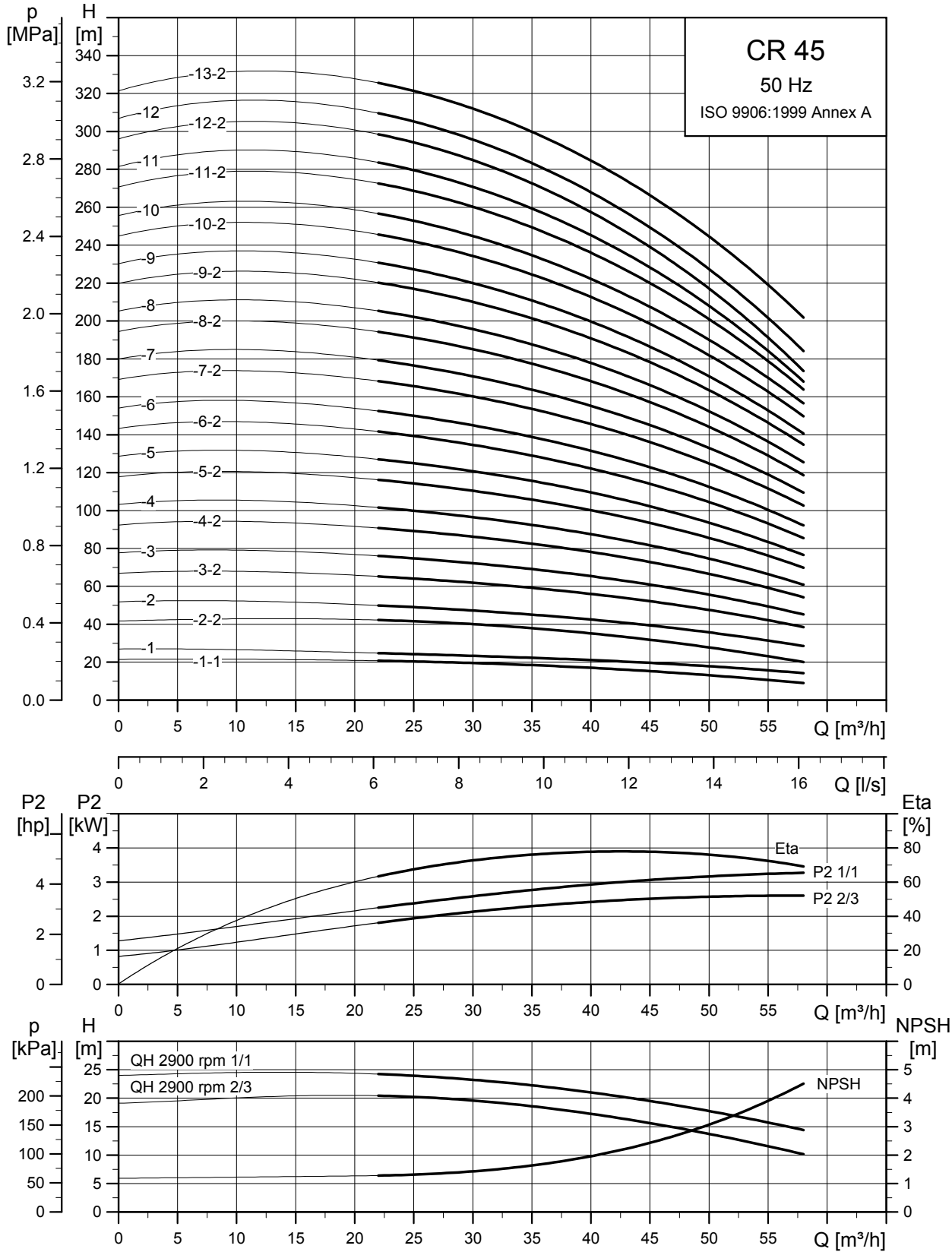
CR 45
50 Hz
ISO 9906:1999 Annex A
p [MPa]
H [m]
-13-2
-12
-12-2
-11
-11-2
-10
-10-2
-9
-9-2
-8
-8-2
-7
-7-2
-6
-6-2
-5
-5-2
-4
-4-2
-3
-3-2
-2
-2-2
-1
-1-1
Q [m³/h]
Q [l/s]
P2 [hp]
P2 [kW]
Eta [%]
Eta
P2 1/1
P2 2/3
p [kPa]
H [m]
QH 2900 rpm 1/1
QH 2900 rpm 2/3
NPSH [m]
NPSH
TM02 7304 1013

Dimensional sketch

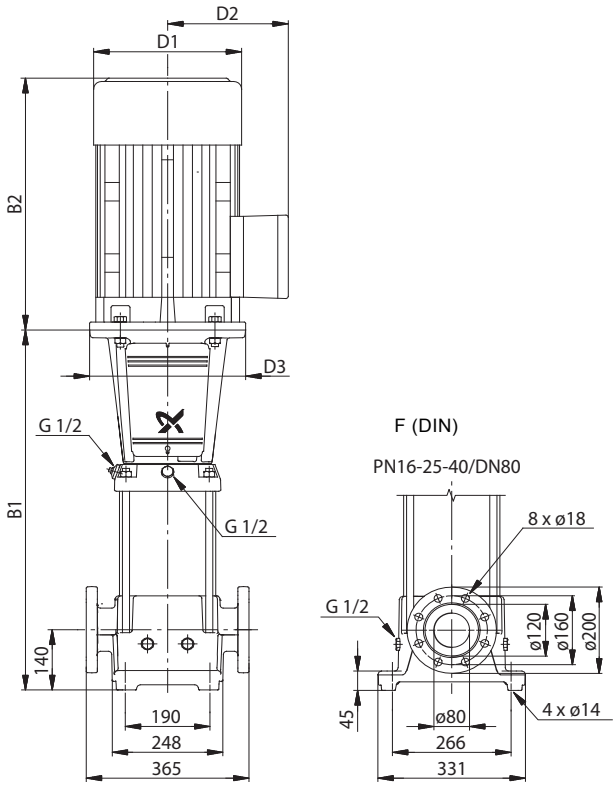

TM01 1751 3203

Dimensions and weights

Pump type	Motor P_2 [kW]	CR Dimension [mm] B1	B1+B2	D1	D2	D3	Net weight [kg]
CR 45-1-1	3.00	559	894	198	120	-	80
CR 45-1	4.00	559	931	220	134	-	89
CR 45-2-2	5.50	639	1030	220	134	300	104
CR 45-2	7.50	639	1018	260	159	300	114
CR 45-3-2	11.00	829	1300	314	204	350	163
CR 45-3	11.00	829	1300	314	204	350	163
CR 45-4-2	15.00	909	1380	314	204	350	180
CR 45-4	15.00	909	1380	314	204	350	180
CR 45-5-2	18.50	989	1504	314	204	350	197
CR 45-5	18.50	989	1504	314	204	350	197
CR 45-6-2	22.00	1069	1610	314	204	350	217
CR 45-6	22.00	1069	1610	314	204	350	217
CR 45-7-2	30.00	1149	1760	396	315	400	339
CR 45-7	30.00	1149	1760	396	315	400	339
CR 45-8-2	30.00	1229	1840	396	315	400	343
CR 45-8	30.00	1229	1840	396	315	400	343
CR 45-9-2	30.00	1309	1920	396	315	400	347
CR 45-9	37.00	1309	1945	396	315	400	362
CR 45-10-2	37.00	1389	2025	396	315	400	367
CR 45-10	37.00	1389	2025	396	315	400	367
CR 45-11-2	45.00	1469	2177	439	338	450	455
CR 45-11	45.00	1469	2177	439	338	450	455
CR 45-12-2	45.00	1549	2257	439	338	450	460
CR 45-12	45.00	1549	2257	439	338	450	460
CR 45-13-2	45.00	1629	2337	439	338	450	464

CR 64

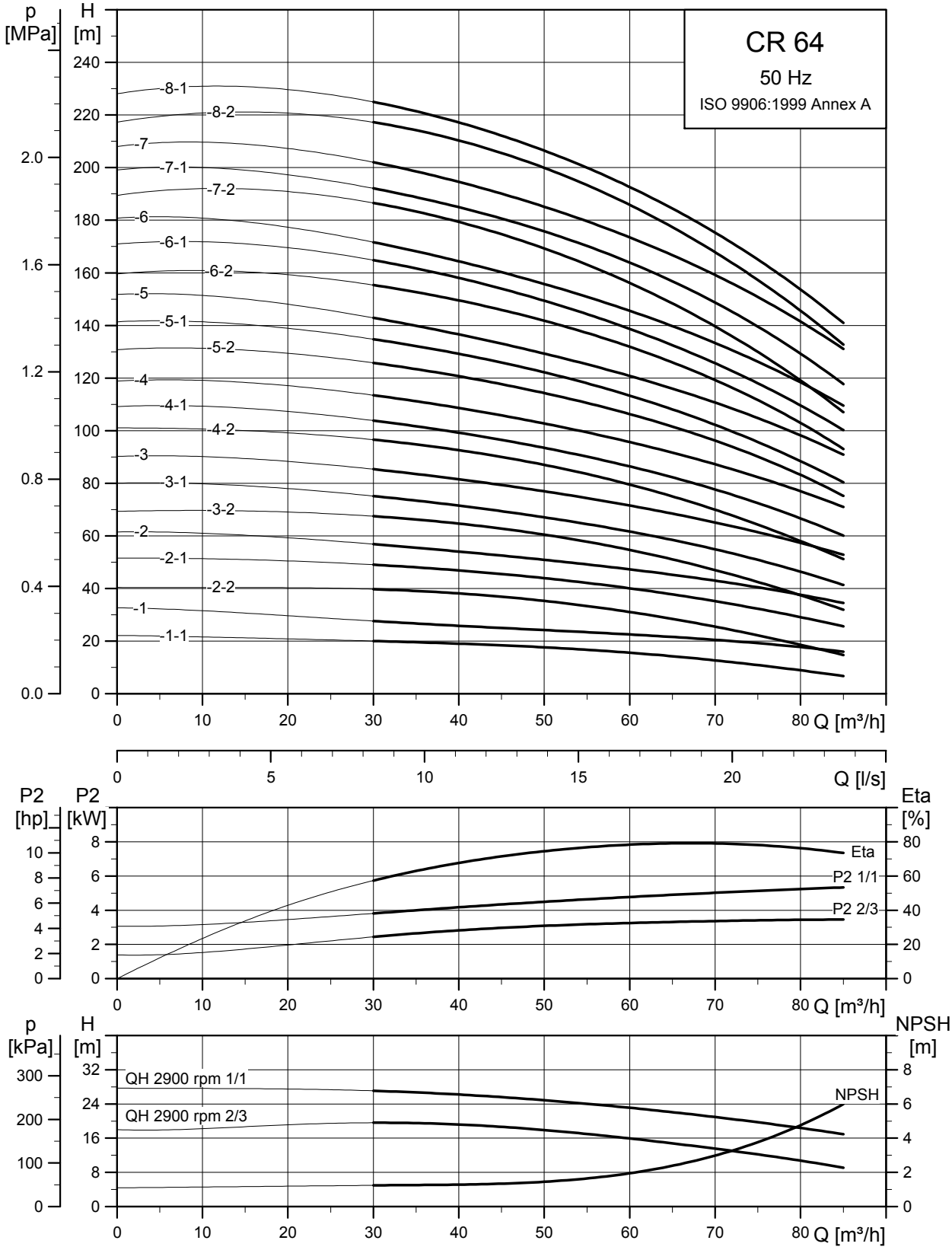
CR 64
50 Hz
ISO 9906:1999 Annex A
p [MPa]
H [m]
-8-1
-8-2
-7
-7-1
-7-2
-6
-6-1
-6-2
-5
-5-1
-5-2
-4
-4-1
-4-2
-3
-3-1
-3-2
-2
-2-1
-2-2
-1
-1-1
Q [m³/h]
Q [l/s]
P2 [hp]
P2 [kW]
Eta [%]
Eta
P2 1/1
P2 2/3
p [kPa]
H [m]
NPSH [m]
QH 2900 rpm 1/1
QH 2900 rpm 2/3
NPSH
TM02 7306 1013

Dimensional sketch

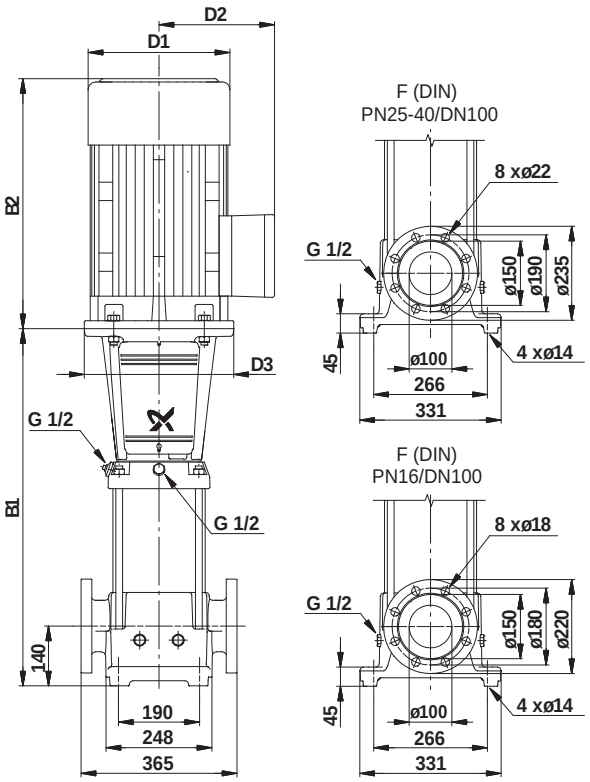

TM01 1753 5197

Dimensions and weights

Pump type	Motor P_2 [kW]	CR Dimension [mm] B1	B1+B2	D1	D2	D3	Net weight [kg]
CR 64-1-1	4.00	561	933	220	134	-	91
CR 64-1	5.50	561	952	220	134	300	102
CR 64-2-2	7.50	644	1023	260	159	300	117
CR 64-2-1	11.00	754	1225	314	204	350	162
CR 64-2	11.00	754	1225	314	204	350	162
CR 64-3-2	15.00	836	1307	314	204	350	180
CR 64-3-1	15.00	836	1307	314	204	350	180
CR 64-3	18.50	836	1351	314	204	350	193
CR 64-4-2	18.50	919	1434	314	204	350	197
CR 64-4-1	22.00	919	1460	314	204	350	211
CR 64-4	22.00	919	1460	314	204	350	211
CR 64-5-2	30.00	1001	1612	396	315	400	333
CR 64-5-1	30.00	1001	1612	396	315	400	333
CR 64-5	30.00	1001	1612	396	315	400	333
CR 64-6-2	30.00	1084	1695	396	315	400	339
CR 64-6-1	37.00	1084	1720	396	315	400	354
CR 64-6	37.00	1084	1720	396	315	400	354
CR 64-7-2	37.00	1166	1802	396	315	400	359
CR 64-7-1	37.00	1166	1802	396	315	400	359
CR 64-7	45.00	1166	1874	439	338	450	443
CR 64-8-2	45.00	1249	1957	439	338	450	448
CR 64-8-1	45.00	1249	1957	439	338	450	448

CR 90

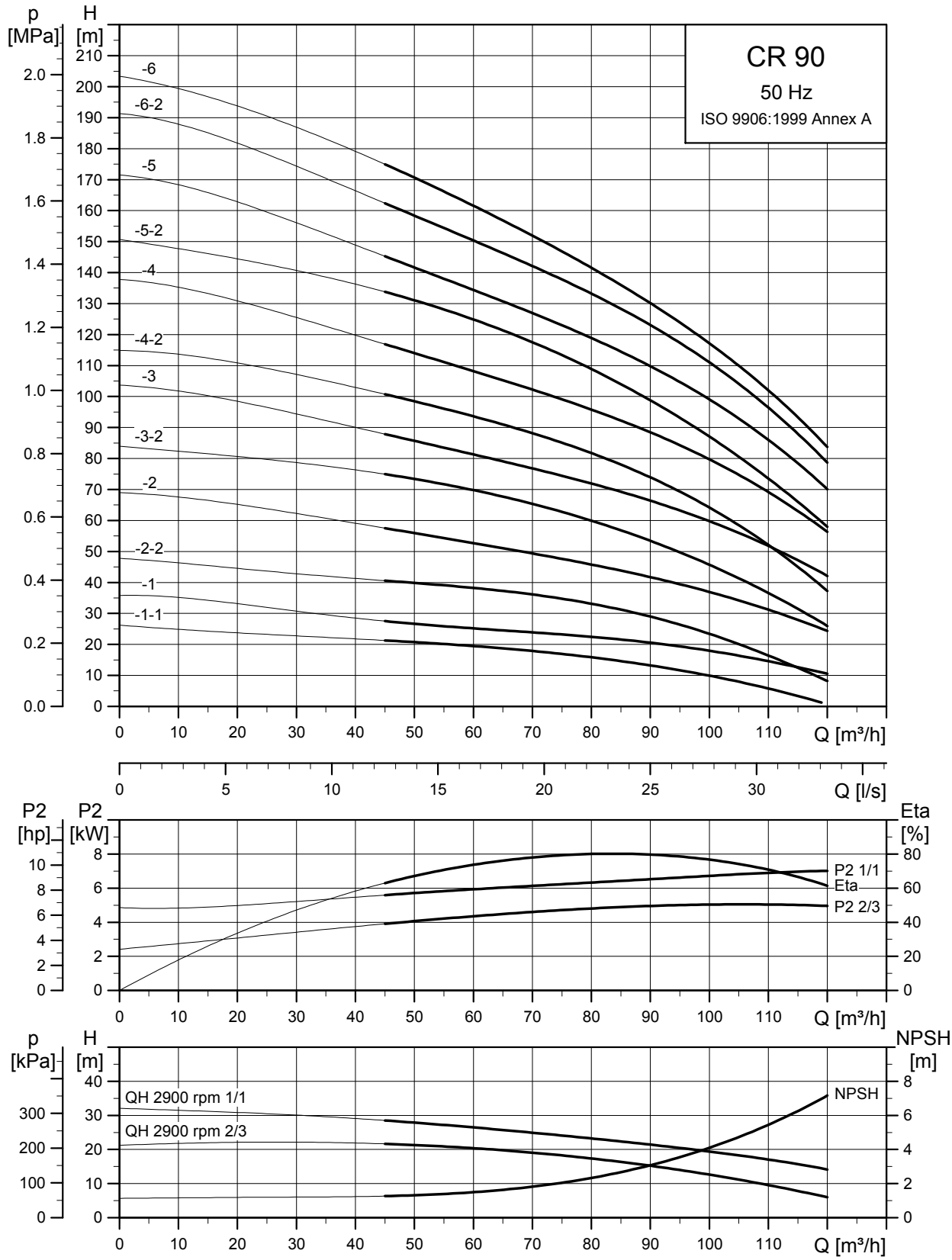
CR 90
50 Hz
ISO 9906:1999 Annex A
p [MPa]
H [m]
-6
-6-2
-5
-5-2
-4
-4-2
-3
-3-2
-2
-2-2
-1
-1-1
Q [m³/h]
Q [l/s]
P2 [hp]
P2 [kW]
Eta [%]
P2 1/1
Eta
P2 2/3
p [kPa]
H [m]
NPSH [m]
QH 2900 rpm 1/1
QH 2900 rpm 2/3
NPSH
TM02 7308 1013

Dimensional sketch

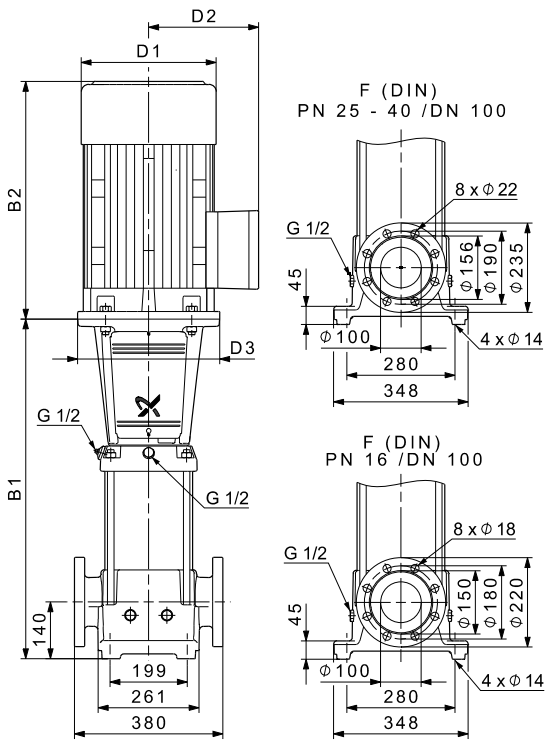

TM01 1755 4809

Dimensions and weights

Pump type	Motor P_2 [kW]	CR					
		Dimension [mm]					Net weight [kg]
		B1	B1+B2	D1	D2	D3	
CR 90-1-1	5.50	571	962	220	134	300	107
CR 90-1	7.50	571	950	260	159	300	117
CR 90-2-2	11.00	773	1244	314	204	350	168
CR 90-2	15.00	773	1244	314	204	350	181
CR 90-3-2	18.50	865	1380	314	204	350	199
CR 90-3	22.00	865	1406	314	204	350	212
CR 90-4-2	30.00	957	1568	396	315	400	335
CR 90-4	30.00	957	1568	396	315	400	335
CR 90-5-2	37.00	1049	1685	396	315	400	356
CR 90-5	37.00	1049	1685	396	315	400	356
CR 90-6-2	45.00	1141	1849	439	338	450	446
CR 90-6	45.00	1141	1849	439	338	450	446

CR 120

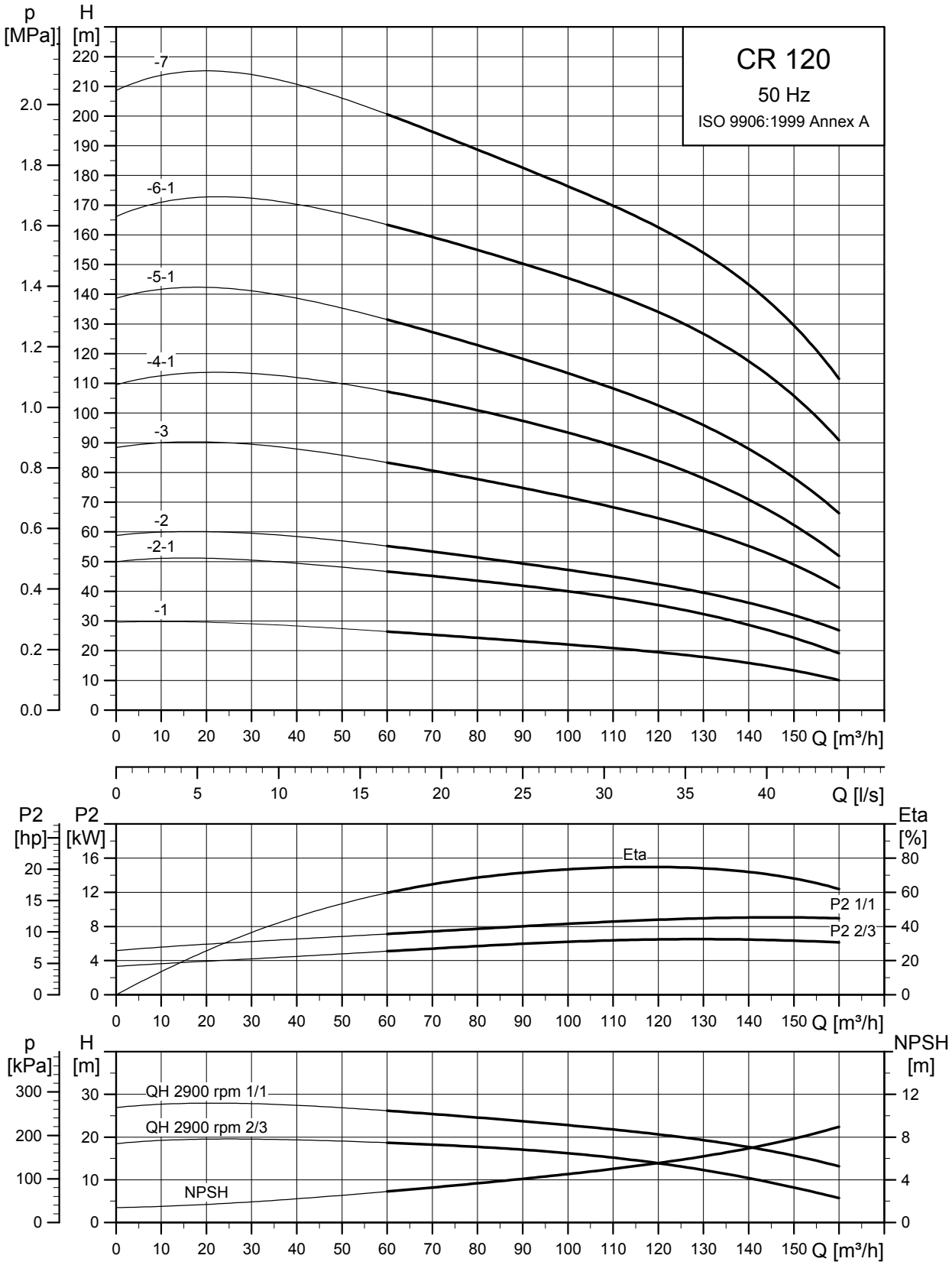
CR 120
50 Hz
ISO 9906:1999 Annex A
p [MPa]
H [m]
-7
-6-1
-5-1
-4-1
-3
-2
-2-1
-1
Q [m³/h]
Q [l/s]
P2 [hp]
P2 [kW]
Eta [%]
Eta
P2 1/1
P2 2/3
p [kPa]
H [m]
NPSH [m]
QH 2900 rpm 1/1
QH 2900 rpm 2/3
NPSH
TM03 8743 1013

Dimensional sketch

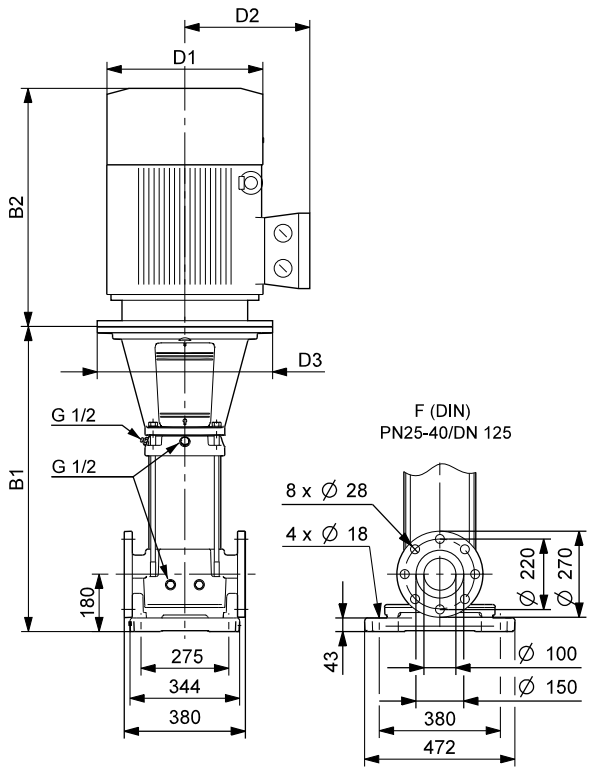

Dimensions and weights

Pump type	Motor P_2 [kW]	CR Dimension [mm] B1	B1+B2	D1	D2	D3	Net weight [kg]
CR 120-1	11.00	834	1305	314	204	350	191
CR 120-2-1	18.50	990	1505	314	204	350	227
CR 120-2	22.00	990	1531	314	204	350	240
CR 120-3	30.00	1145	1756	396	315	400	368
CR 120-4-1	37.00	1301	1937	396	315	400	392
CR 120-5-1	45.00	1456	2164	439	338	450	487
CR 120-6-1	55.00	1642	2389	487	410	550	627
CR 120-7	75.00	1797	2617	540	433	550	741

CR 150

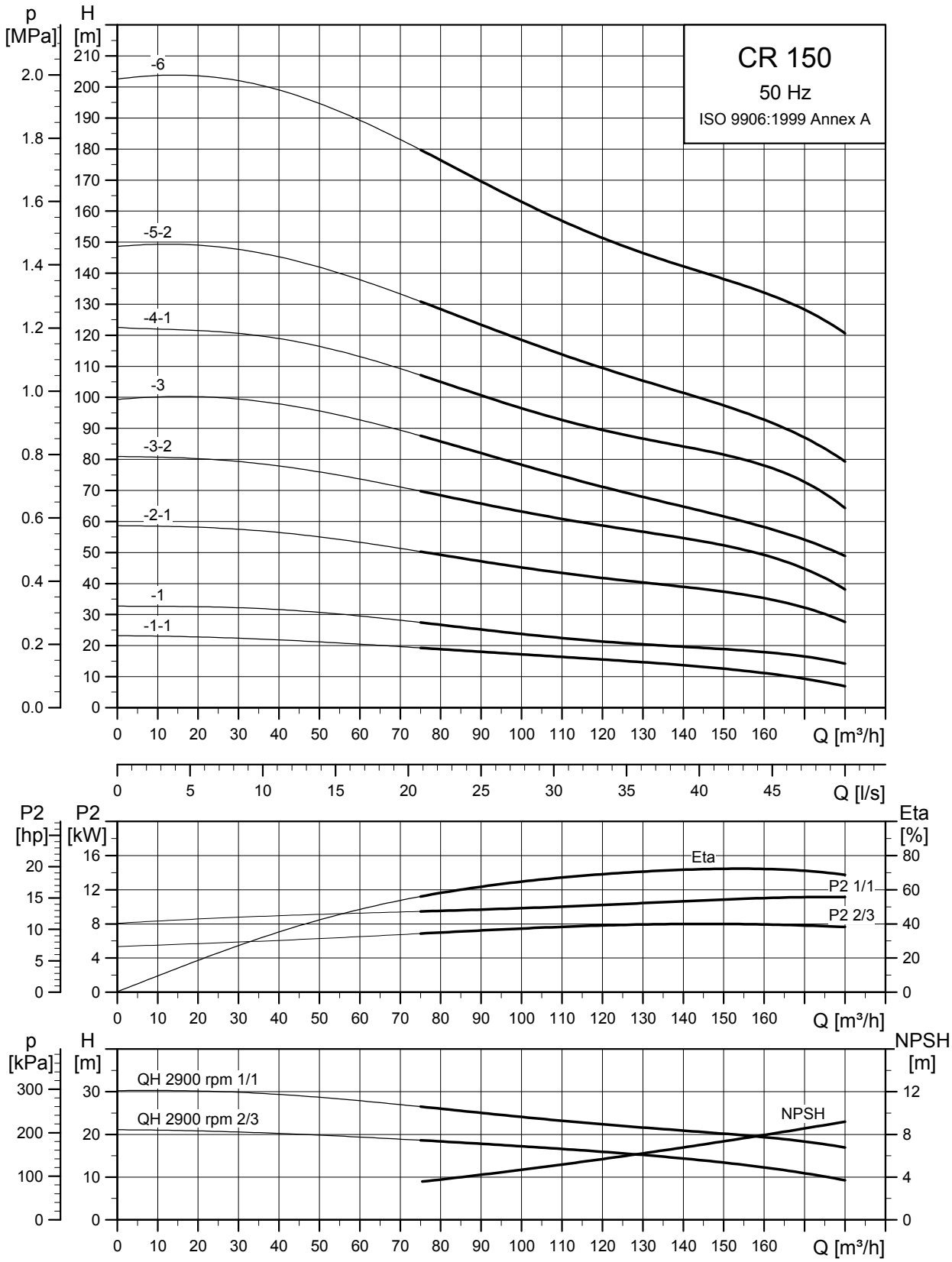
CR 150
50 Hz
ISO 9906:1999 Annex A
p [MPa]
H [m]
-6
-5-2
-4-1
-3
-3-2
-2-1
-1
-1-1
Q [m³/h]
Q [l/s]
P2 [hp]
P2 [kW]
Eta [%]
Eta
P2 1/1
P2 2/3
p [kPa]
H [m]
NPSH [m]
QH 2900 rpm 1/1
QH 2900 rpm 2/3
NPSH
TM03 8745 3513

Dimensional sketch

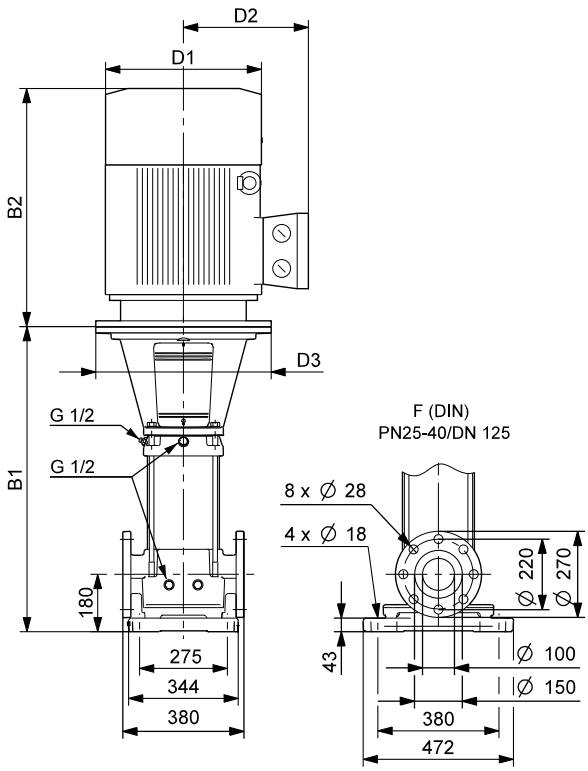

Dimensions and weights

Pump type	Motor P_2 [kW]	CR Dimension [mm] B1	B1+B2	D1	D2	D3	Net weight [kg]
CR 150-1-1	11.00	834	1305	314	204	350	191
CR 150-1	15.00	834	1305	314	204	350	204
CR 150-2-1	22.00	990	1531	314	204	350	241
CR 150-3-2	30.00	1145	1756	396	315	400	368
CR 150-3	37.00	1145	1781	396	315	400	383
CR 150-4-1	45.00	1301	2009	439	338	450	477
CR 150-5-2	55.00	1486	2233	487	410	550	617
CR 150-6	75.00	1642	2462	540	433	550	733

© Copyright Grundfos Holding A/S

The name Grundfos, the Grundfos logo, and **be think innovate** are registered trademarks owned by Grundfos Holding A/S or Grundfos A/S, Denmark. All rights reserved worldwide.

V7023751 0214

ECM: 1130677

GRUNDFOS A/S
DK-8850 Bjerringbro . Denmark
Telephone: +45 87 50 14 00
www.grundfos.com

GRUNDFOS